Tetrahedron Letters Vol. 21, pp 2137 - 2140 0040-4039/80/0522-2137$02.00/0
© Pergamon Press Ltd. 1980. Printed in Great Britain

CONCERNING THE ONE SITE RESP. TWO SITE COORDINATION MODEL FOR KETONES IN LIS CALCULATIONS

Peter Földesi and Otmar Hofer*

Institute of Organic Chemistry, University of Vienna, A-1090 Vienna, Austria

Summary: Model calculations (1) show that both coordination models for ketones (one site and two site model, resp.) are equally well suited for simulation of experimental LIS data.

Currently two alternative coordination models are used for the computational simulation of the lanthanide induced shifts (LIS) of ketone complexes with shift reagents: the simpler (one site) model (OSM) employed exclusively up to 1976, and the two site model (TSM) which takes account of the two lone pairs involved in the complexation of the substrate molecule (2-4).

It should be kept in mind that both models present a rather crude picture of what happens in solution. The obvious axial symmetry of Ln(III) reagent — substrate complexes is explained reasonably by assuming many rapidly interconverting complex species of varying geometry resulting in an averaged complex geometry with an "effective" principal magnetic axis aligned along the Ln — coordination site bond (5). The OSM assumes one averaged Ln position, the TSM postulates two distinct centers for two averaged Ln positions. An important question arises: Is the OSM or the TSM the "correct" model to simulate experimental LIS data? If the TSM is the only correct one (2,3) all previous results using the OSM may be suspect. In order to investigate this matter systematically we have fitted the LIS of a series of compounds with increasingly bulky substituents in the α-position to the carbonyl (Indanones: α-H, Me, Et, Isopr, tert-Bu, Benzyl) to both models (6). It turns out that the systematic changes in the LIS are simulated very well by both models and neither one could be rejected or favored. In Refs. (2,3) the TSM is the preferred one but nevertheless both models were able to simulate the data. No striking evidence is yet known to reject either one model or the other safely (6).

In order to clarify matters we decided to compare the structure of the magnetic fields for both models.

Our computer program involves the following steps:

(i) The space which will be checked by means of both models has to be defined. In real substrate molecules the space covered by the single probes (H-1, C-13 nuclei) is a limited one depending on the size of the molecule and its orientation vis-à-vis the reagent. The standard space checked in our model calculations was: x and y between -2.5 Å and +2.5 Å, z between -5 Å and -1 Å (Fig.1).

Table 1. Fits no.1-8 between the TSM (x and y = -2.5/+2.5, z= -5/-1 Å; population ratio 0.5:0.5; r= 2.8 and 3.1 Å, resp.; ρ = 15°, 30°, 45°, and 60°, resp.; s. Fig.1) and the OSM (r′, ρ' , and φ') characterized by the agreement factor R(min); only r′ ≥ 2.5 Å and ≤ 3.1 Å were considered in the fitting procedure. ρ and φ in ° ; R(min) in %: 0-3 % excellent, 3 - 6 % good, 6-10 % reasonable agreement between both models.

ρ	r= 2.8 Å					r= 3.1 Å				
	no.	R(min)	r′	ρ'	φ'	no.	R(min)	r′	ρ'	φ'
15°	1	0.9	2.7	0	0	5	0.9	3.0	0	0
30°	2	4.4	2.5	0	0	6	3.5	2.8	0	0
45°	3	16.1	2.5	20	0	7	10.3	2.5	0	0
60°	4	36.1	2.5	40	0	8	27.4	2.5	30	0

Steps of 1 Å give the coordinates for a three-dimensional network of 180 "atoms". Modifications of this standard space covered by the artificial substrate molecule were tested as well.

(ii) The relative LIS (= geometrical factors of the McConnell-Robertson equation) according to the TSM are computed for all points of the artificial test molecule; these values correspond to the experimental LIS in the subsequent fitting procedure. Ln^1 and Ln^2 (Fig.1) for the TSM are kept in the x-z plane (azimuthal angle φ= 0° and 180°, resp.) the distance O-Ln was taken 2.8 or 3.1 Å, the angle ρ (supplement to the Ln-O-C bond angle) was varied between 0° and 60° (Table 1).

(iii) These TSM LIS data are simulated by means of a usual LIS calculation based on the OSM [using again the coordinates described in (i)]. In other words, the TSM is simulated by means of the OSM. The agreement factor R(min) (7) is taken as a measure how well both models can simulate each other; it should be noted that the R factor is the same if either the OSM is fitted to the TSM or vice versa.

The resulting R factor will depend on the parameters chosen for the TSM and the space covered by the test coordinates. Results are summarized in Tables 1 and 2.

Test calculations no. 1,2 and 5,6 show that up to a ρ of 30° (for the TSM) both models give a very closely related structure of the dipolar magnetic field within the standard space (indicated by small R factors of 0.9 - 4.4 %). ρ = 30° (or the angle C-O-Ln = 150°) corresponds to a 25° distortion of the C-O-Ln bond angle compared to the C-O-lone pair angle in formaldehyde (8). The most severe deviations between the models occur for points (or "atoms") close to the C=O moiety and the Ln(III) positions (compare Fig.2). Extension of the space tested (z between -5 Å and ± 0 Å) increases R from 4.4% (no.2) to 7.5 % (no. 10).

Table 2. A selection of some characteristic agreement factors R(min) [%] between the TSM and the OSM.

no.	space checked[a] x y z [Å; from/to]	TSM r [Å]	TSM ρ [°]	TSM pop. $Ln^1:Ln^2$	R(min)	OSM r' [A]	OSM ρ' [°]	OSM φ' [°]
9	st.[a] st. -5/-2	2.8	30	0.5:0.5	3.5	2.5	0	0
10[b]	st. st. -5/±0	2.8	30	0.5:0.5	7.5[b]	2.6	0	0
11[b]	st. st. -5/±0	2.8	30	0.9:0.1	3.7[b]	2.8	30	180
12	-0.5/2.5 st. st.	2.8	30	0.7:0.3	2.7	2.5	10	80
13	st. st. -5/-2	3.1	45	0.5:0.5	8.9	2.5	0	0
14	st. st. st.	3.1	45	0.7:0.3	8.3	2.8	30	180
15	st. st. st.	3.1	45	0.9:0.1	3.2	3.0	40	180
16	-0.5/2.5 st. st.	3.1	45	0.7:0.3	5.6	2.6	0	0

[a] st.= standard space, s. Fig. 1

[b] the most unrealistic points are neglected (for instance x=y=z=0, which is the complexation site itself); for the full space R= 11%(no.10) and 4.8 % (no. 11)

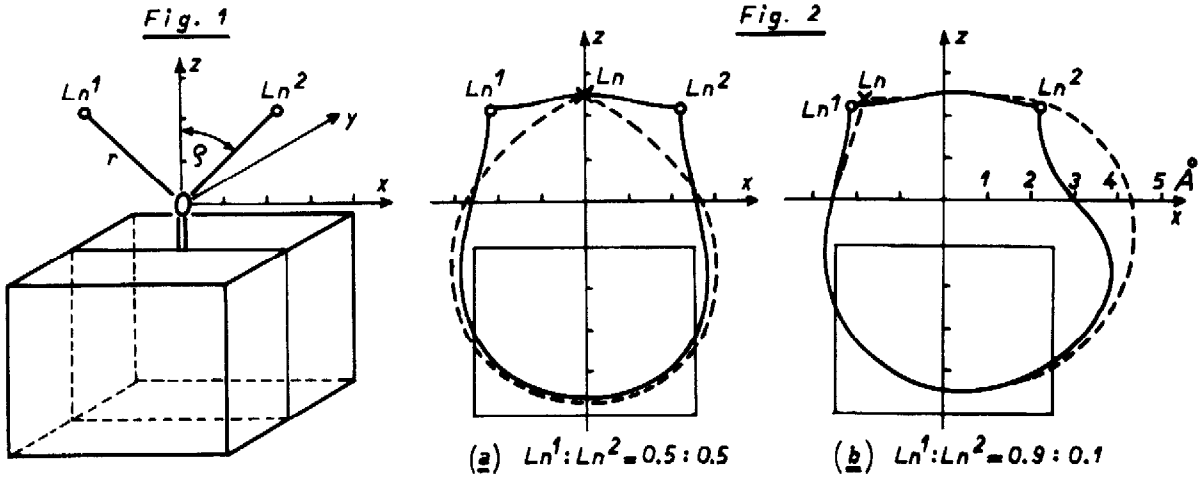

Fig.1. The TSM (Ln^1, Ln^2) with characteristic parameters r and ρ (φ is 0° and 180°, resp.). The idealized substrate molecule is represented by a cube with standard dimensions x (-2.5 to +2.5), y (-2.5 to +2.5), and z (-5 to -1 Å).

Fig.2. Cross section through the magnetic fields based on the TSM (———) and the OSM (----) showing lines of identical induced shifts for an optimal fit: (a) corresponds to run no.6; (b) to no.15 (Tab. 1 and 2); the marked area indicates the standard space checked (s.Fig.1).

On the other hand a limitation of z (-5/-2 Å) decreases R from 4.4 % (no.2) to 3.5 % (no.9); Tab.2. So far only idealized symmetrical substrates with a population ratio 0.5:0.5 were considered. A population ratio of 0.9:0.1 (other parameters the same as in no.10) results in a drop of R from 7.5 (no.10) to 3.7 % (no.11). No.12 shows the result for an unsymmetrical substrate with R= 2.7 %.

For a TSM with ρ = 45° (corresponding to 10° distortion of the C-O-Ln bond angle) and r= 3.1 Å R(min) is 10.3 % (no. 7). Limitation of the space (no.13) lowers R to 8.9 %; change in the populations from 0.5:0.5 to 0.7:0.3 and 0.9:0.1 gives a decrease of R to 8.3 % and 3.2 % (no. 14, 15). Finally run no.16 represents a comparatively realistic unsymmetrical ketone giving R= 5.6%.

A discrimination of OSM and TSM based on LIS calculations should be thus rather difficult (9). Only for atoms very close to the carbonyl function (or close to the Ln(III) position in the complex) do substantial deviations occur (Fig.2). This means that large substituents are needed for potential discrimination. However, a substituent of this type will shift the population ratio toward 1:0 and two bulky substituents (close to both Ln(III) positions in the TSM) will increase the distortion of the C-O-Ln bond angle (change to small ρ). In both cases the chances for discrimination are impaired.

It is not the aim of this work to decide whether the OSM or the TSM is the physically more meaningful – or the "correct" – model. However, a safe conclusion to be drawn from these model calculations is that over a wide range of possible test molecules the OSM and TSM must necessarily give an identical answer to stereochemical problems, simply because the structures of the corresponding magnetic fields do not differ essentially in the region of interest.

References and Notes

(1) Model Calculations on LIS, IV. III.: P.Földesi and O.Hofer, Monatsh. Chem. 111, 351 (1980).
(2) R.E.Lenkinski and J.Reuben, J.Amer.Chem.Soc. 98, 4065 (1976).
(3) B.H.S.Liénard and A.J.Thomson, J.C.S.Perkin II, 1390 (1977).
(4) R.J.Abraham, D.J.Chadwick, and F.Sancassan, Tetrahedron Lett., 265 (1979).
(5) W.DeW.Horrocks, Jr., J.Amer.Chem.Soc. 96, 3022 (1974).
(6) O.Hofer, Monatsh.Chem. 110, 745 (1979); ibid. 110, 979 (1979).
(7) R.E.Davis and M.R.Willcott, III, J.Amer.Chem.Soc. 94, 1744 (1972).
(8) W.H.Flygare and V.W.Weiss, J.Chem.Phys. 45, 2785 (1966).
(9) The problem seems to be similar for diols [O.Hofer, H.Griengl, and P.Nowak, Monatsh.Chem. 109, 21 (1978)] but matters are different for bidentate complexes. In ketones one has to deal with the superposition of two dipolar fields oriented toward one coordination center (two Ln positions, one coordination site); in diols the two superposed dipolar fields are oriented in a very different manner (one Ln position, two coordination centers). Comparable calculations for diols (bidentate model versus one site model) show that the agreement factors are usually two to three times higher for the one site model than for the bidentate model; thus, the bidentate model in many cases simulates the data better than the simpler model; however, if the nuclei yielding LIS data are far off the two OH groups then both models give again similar good fits.

(Received in Germany 18 February 1980)